Laser Equipment Electrical Schematic

Machine Model: LX3015FA

Revision Date: 2026/2/2

Cutting System: FSCUT8000C/6000/4000E/2000E

Technical Execution Standards

Wiring Requirements (Abbreviations comply with IEC 60757)

Wire Colors

AC Main Circuit - Black (BK)

DC Main Circuit - Black (BK)

N Neutral Conductor - Light Blue (LTBU)

PE Grounding wire - Green/Yellow (GNYE)

AC Control Circuit - Red (RD)

DC Control Circuit - Blue (BU)

Minimum Cross-Sectional Area

AC Main Circuit	1.5mm²
DC Main Circuit	0.75mm²
PE Grounding wire	1.5mm²
AC Control Circuit	1.0mm²
DC Control Circuit	0.5mm²

Workmanship Requirements

Ensure terminal connections are secure; no loose connections.

Ensure reliable grounding, neat wiring, and complete, correct wire numbers.

Properly label all electrical components and pneumatic valves.

Assemble strictly according to the schematic. Unauthorized modifications are prohibited.

All exposed cables and air lines must be protected with suitable sleeves.

Keep machine-bed wiring and air lines neat and untangled; leave approx. 20 cm of cable slack.

Designed by	WENYOUGANG	Design Date	2026/2/2
Checked by		Check Date	
Approved by		Approval Date	

Read this page carefully before installation and wiring. Follow the specified procedures.

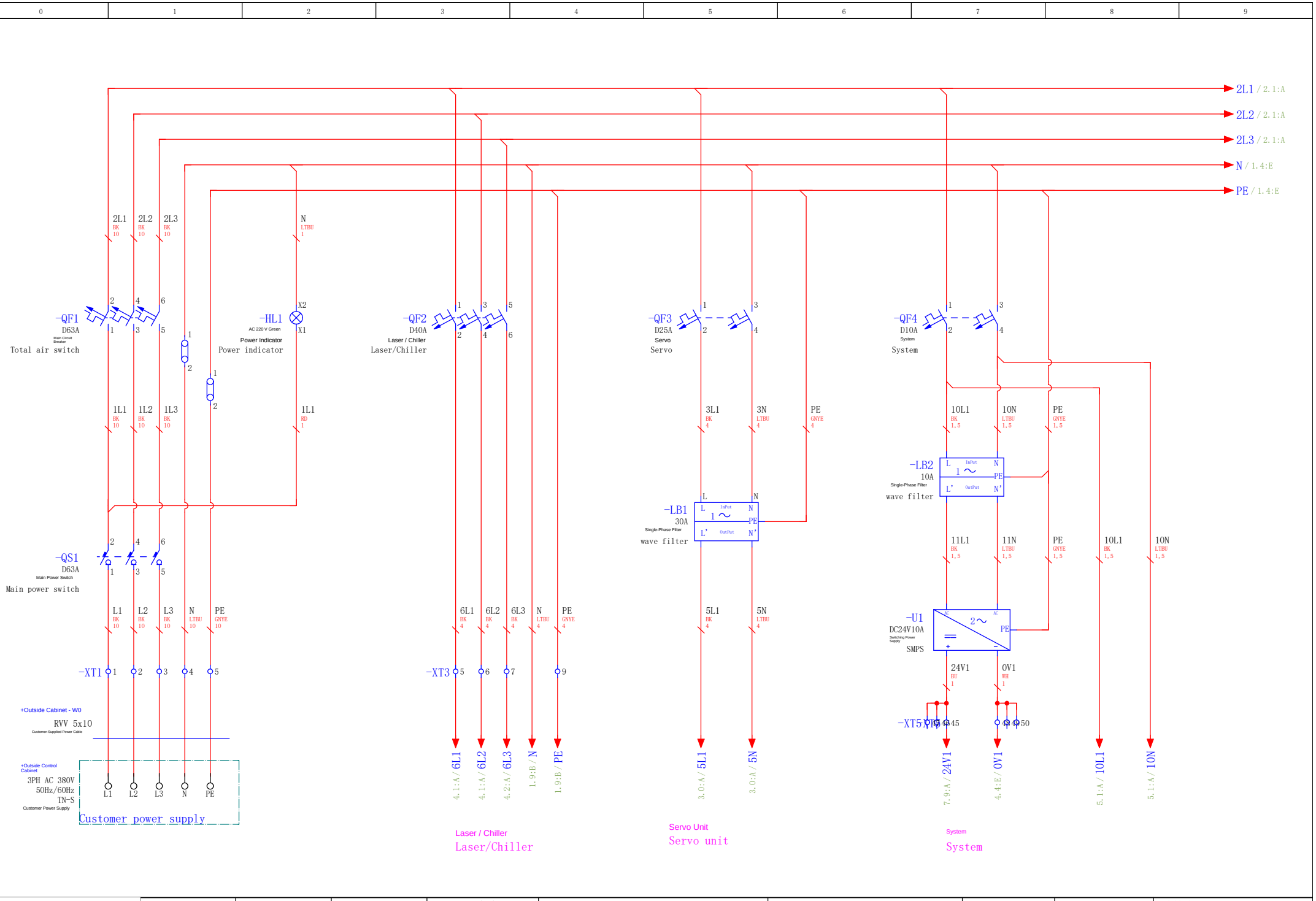

Designed by	WENYOUGANG	Design Date	2026/2/2		Main Circuit 1	Drawing No.	
Checked by		Check Date				Project No.	IEC_tp1001
Approved by		Approval Date				Sheets	1
						Page	3/16

= Electrical Drawings
+ Inside Control Cabinet

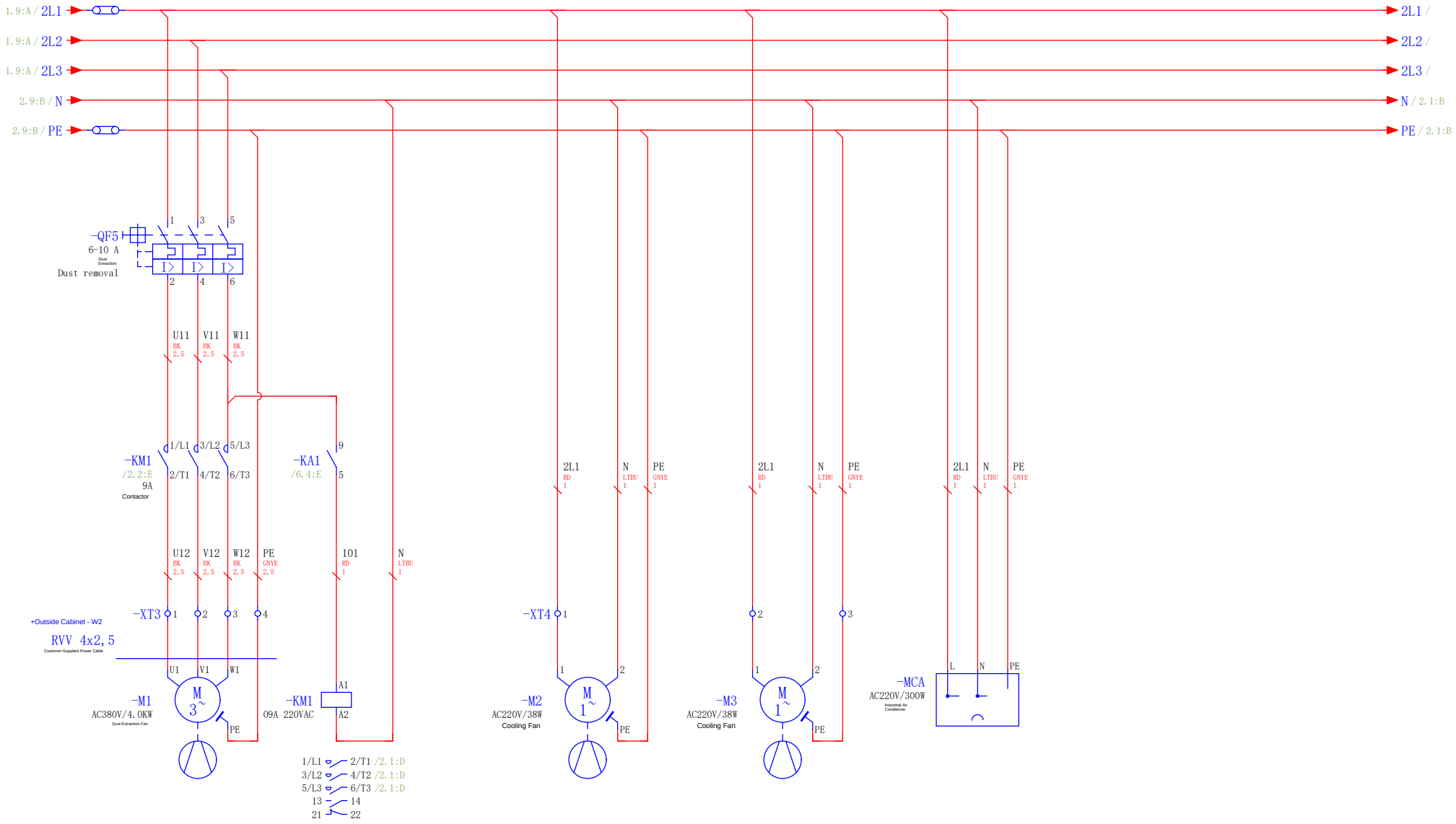

Dust Extraction Fan (Optional)
Fan (optional for orders)

Cooling Fan
Cooling fan

Cooling Fan
Cooling fan

Cabinet Air Conditioner (Optional)
Air conditioning (optional for orders)

Designed by	WENYOUGANG	Design Date	2026/2/2		Main Circuit 2	Drawing No.	
Checked by		Check Date				Project No.	IEC_tp1001
Approved by		Approval Date				Sheets	2
						Page	4/16

= Electrical Drawings
+ Inside Control Cabinet

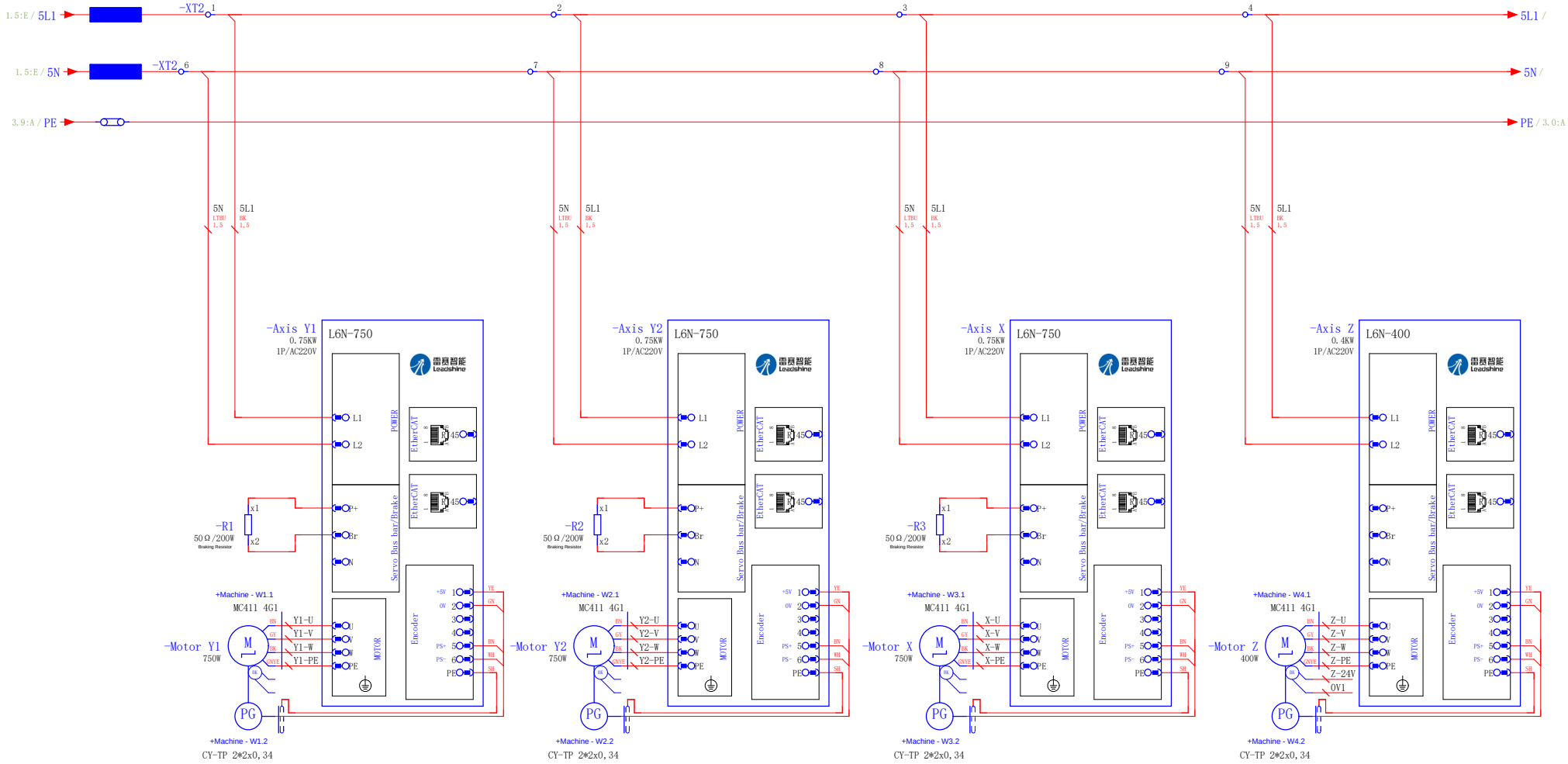

Servo Unit - Axis Y1
Servo Unit_Axis Y1

Servo Unit - Axis Y2
Servo Unit_Axis Y2

Servo Unit - Axis X
Servo Unit_Axis X

Servo Unit - Axis Z
Servo Unit_Axis Z

Note: When connecting an external braking resistor, remove the jumper between terminals P+ and D on the servo drive, then connect the resistor between P+ and C.

Connect the external braking resistor, remove the short circuit of P+ and D, and connect the resistor between P+ and C.

Note: Select the servo unit and braking resistor according to the model-specific order BOM. This drawing shows the standard configuration.

The servo unit and braking resistor are selected according to the order BOM, and this diagram is for reference only.

Note: Select the machine motor power cables according to the model-specific order BOM. This drawing shows the standard configuration.

The power cord for the machine tool motor is selected according to the order BOM, and this diagram is for reference only.

The symbol represents a junction box; parallel terminal connections may be used instead.

The graphic symbol is a junction box, which can be replaced by parallel terminal connections.

Designed by	WENYOUGANG	Design Date	2026/2/2		Leadshine Servo Unit Wiring	Drawing No.	
Checked by		Check Date				Project No.	IEC_tp1001
Approved by		Approval Date				Sheets	3
						Page	5/16

= Electrical Drawings
+ Inside Control Cabinet

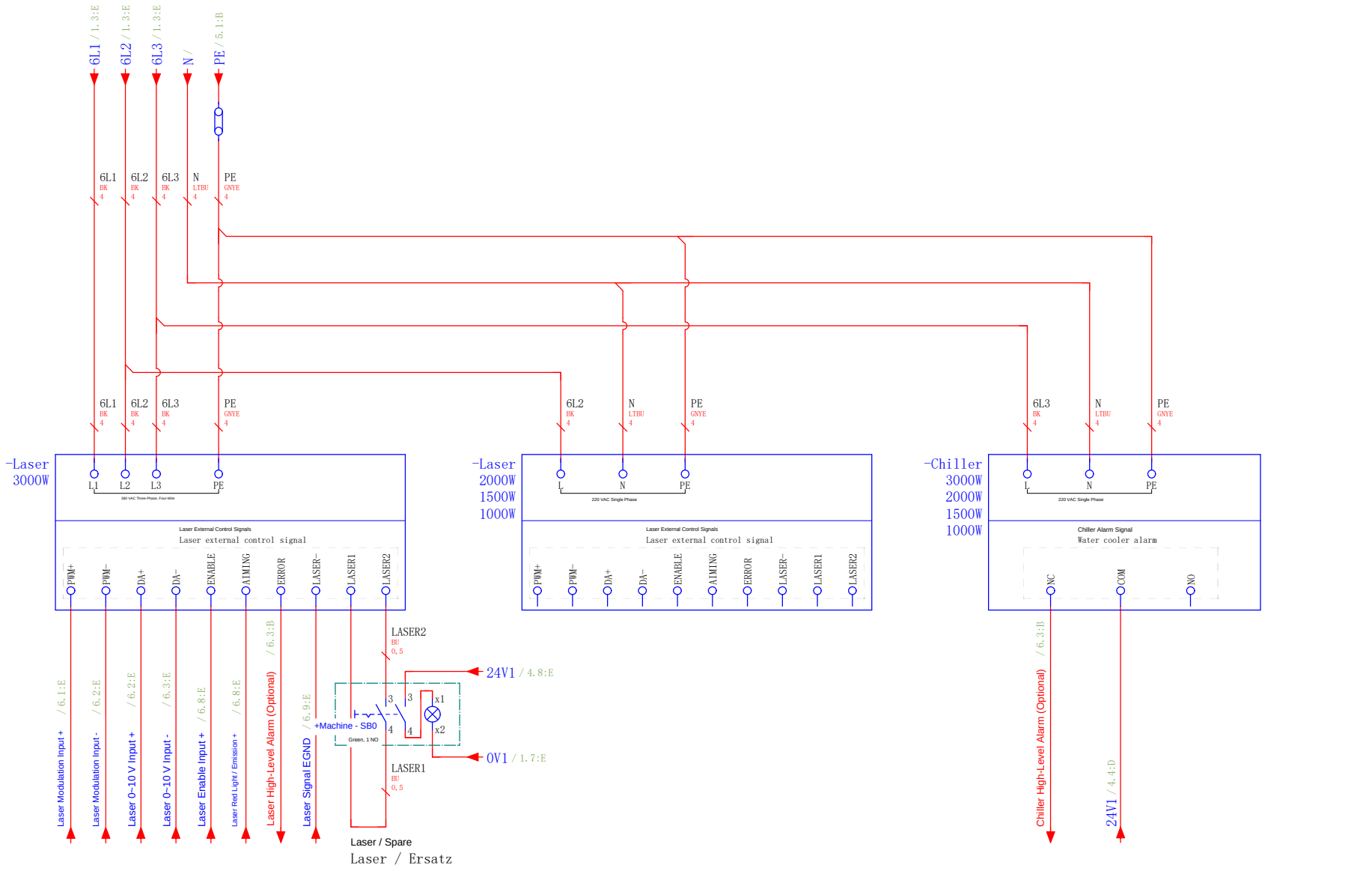

3000 W Laser Source (Optional)
3000W laser(optional for orders)

2000/1500/1000 W Laser Source (Optional)
2000W/1500W/1000W laser(optional for orders)

3000/2000/1500/1000 W Chiller (Optional)
3000W/2000W/1500W/1000W Chiller(optional for orders)

Note: For 1/1.5/2/3 kW laser sources and chillers, power may be supplied from inside the cabinet. Other power ratings require an external customer-supplied power source.

Power range 1/1.5/2/3Kw Laser/Chiller connected to the cabinet, Otherwise, the customer needs to connect an external power supply

Designed by	WENYOUGANG	Design Date	2026/2/2		Laser / Chiller Wiring	Drawing No.	
Checked by		Check Date				Project No.	IEC_tp1001
Approved by		Approval Date				Sheets	4
						Page	6/16

= Electrical Drawings
+ Inside Control Cabinet

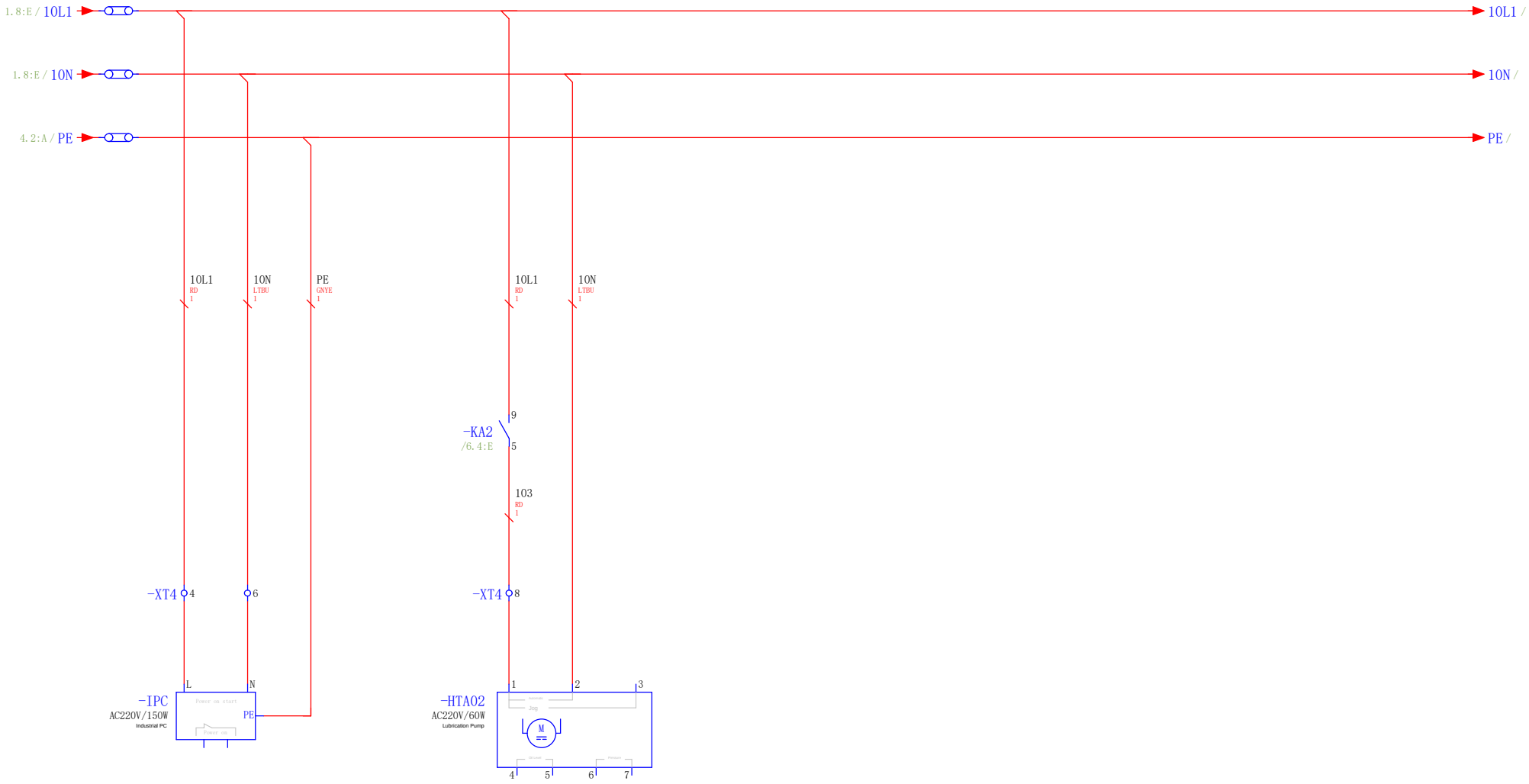

Industrial PC

Industrial computer

Lubrication Pump

Lubricating oil pump

Designed by	WENYOUGANG	Design Date	2026/2/2		220 VAC Control Circuit	Drawing No.		= Electrical Drawings + Inside Control Cabinet
Checked by		Check Date				Project No.	IEC_tp1001	Sheets 5
Approved by		Approval Date						Page 7/16

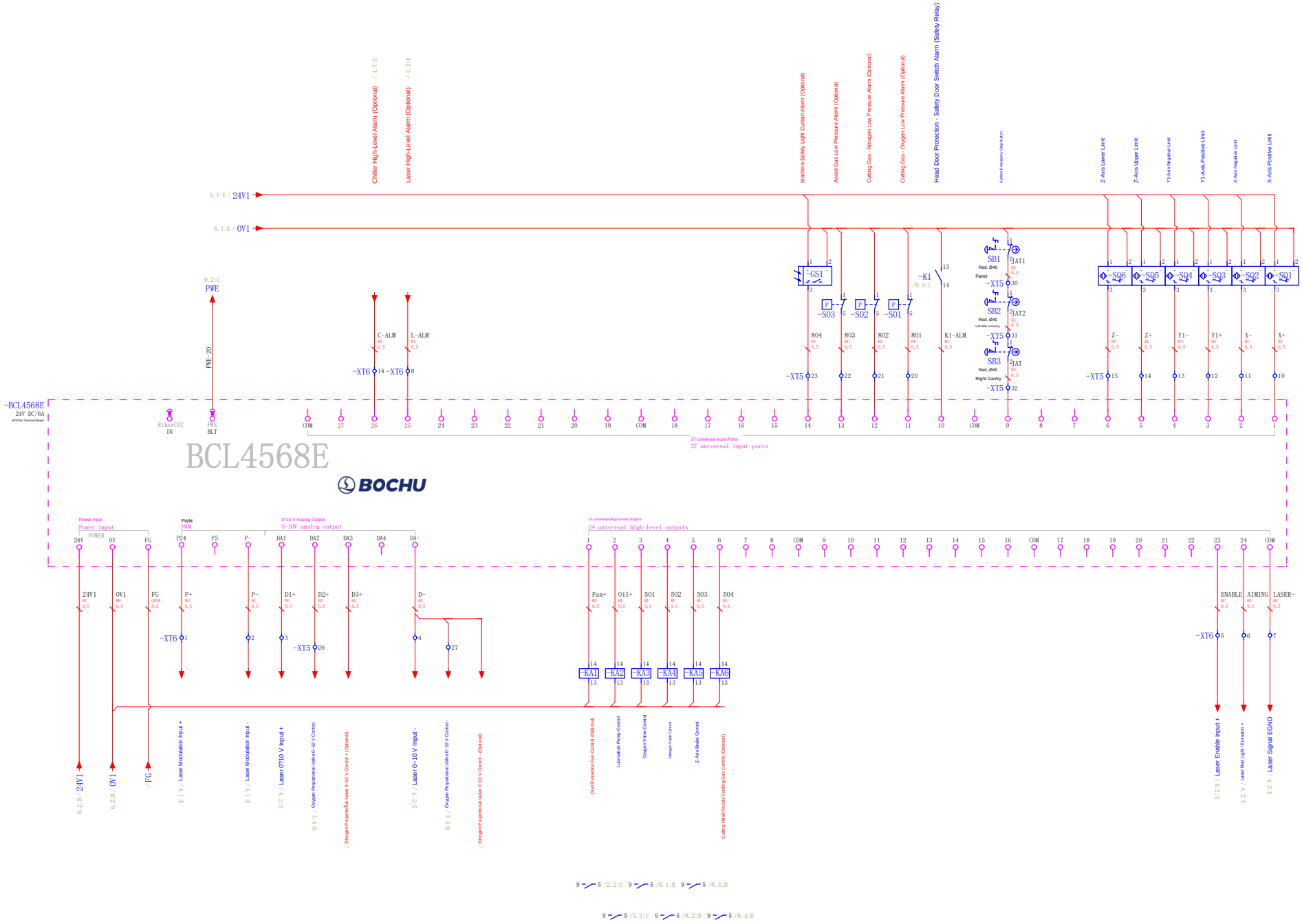

Designed by	WENYOUGANG	Design Date	2026/2/2		System I/O Board 4568E	Drawing No.	
Checked by		Check Date				Project No.	IEC_tp1001
Approved by		Approval Date				Sheets	6
						Page	8/16

= Electrical Drawings
+ Inside Control Cabinet

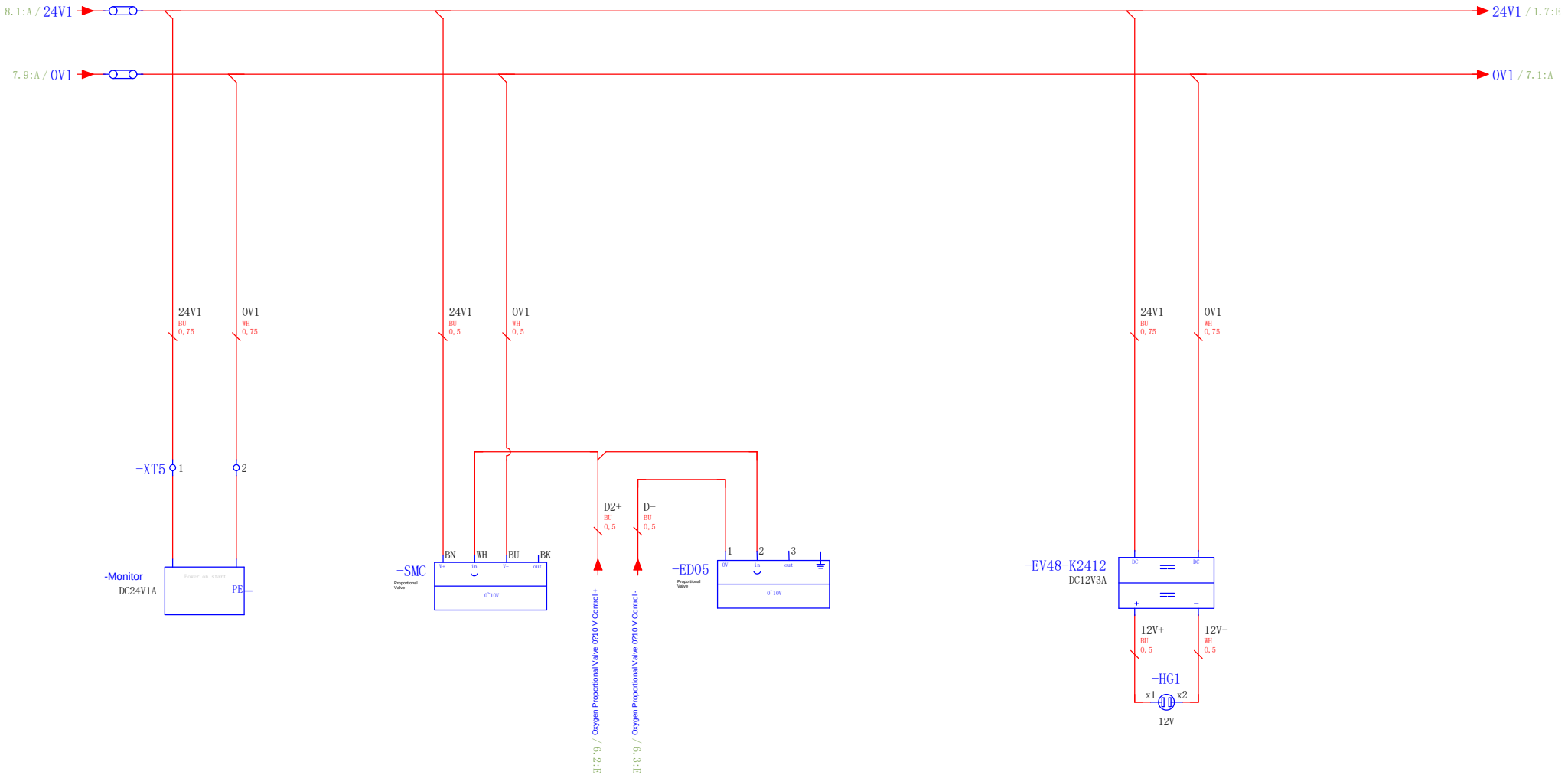

Designed by	WENYOUGANG	Design Date	2026/2/2		24V1 Control Circuit	Drawing No.	
Checked by		Check Date				Project No.	IEC_tp1001
Approved by		Approval Date					

= Electrical Drawings
+ Inside Control Cabinet

Sheets 7
Page 9/16

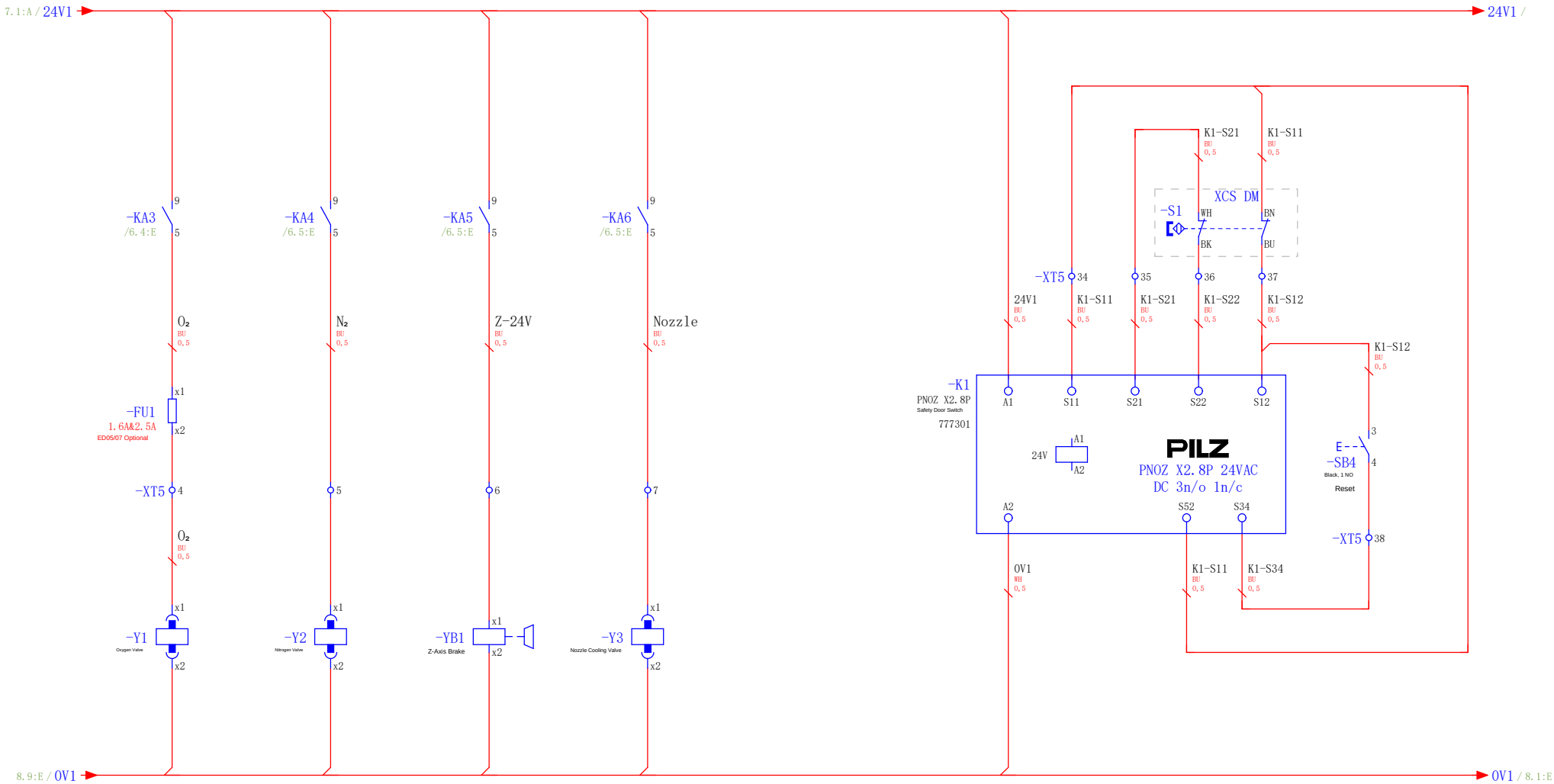

Oxygen Valve

oxygen valve

Nitrogen Valve

Nitrogen valve

Z-Axis Brake Coil

Z-axis brake coil

Nozzle Cooling Air Solenoid Valve (Optional)

Cutting head cooling air solenoid valve (optional)

Safety Door Switch - Safety Relay

Safety door switch - safety relay

P1LZ.777301
PNOZ X2.8P 24VACDC 3n/o 1n/c
13 — 14 /6.6:B
23 — 24
33 — 34
41 — 42

Designed by	WENYOUGANG	Design Date	2026/2/2		24V1 Control Circuit	Drawing No.	
Checked by		Check Date				Project No.	IEC_tp1001
Approved by		Approval Date				Sheets	8
						Page	10/16

= Electrical Drawings
+ Inside Control Cabinet

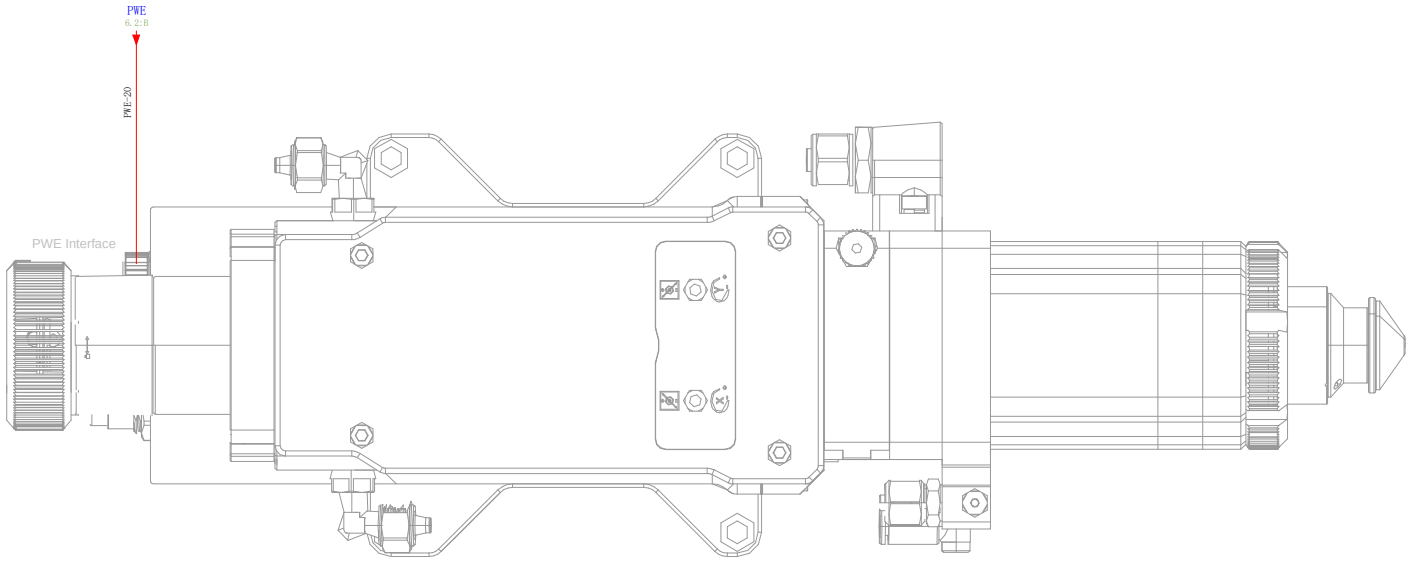

Designed by	WENYOUGANG	Design Date	2026/2/2		Cutting Head - BLT	Drawing No.	
Checked by		Check Date				Project No.	IEC_tp1001
Approved by		Approval Date					

= Electrical Drawings
+ Inside Control Cabinet

Sheets 9
Page 11/16

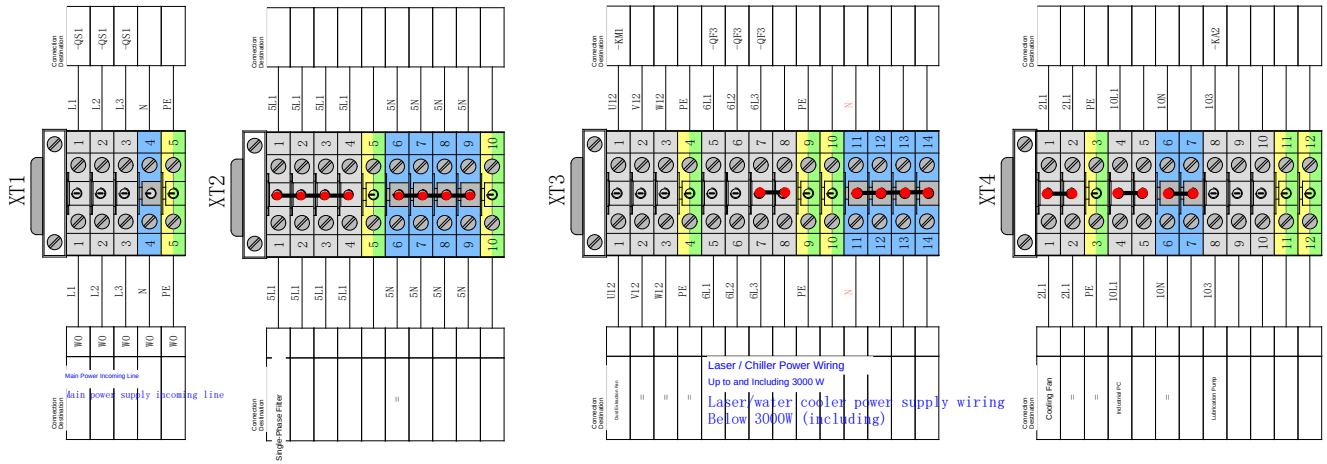

XT1: Push-in Terminal Block UPT-10
XT2: Push-in Terminal Block UPT-6
XT3: Push-in Terminal Block UPT-6
XT4: Push-in Terminal Block UPT-4

XT5: Push-in Terminal Block UPT-2.5/*P-GY
XT6: Push-in Terminal Block UPT-2.5/*P-GY

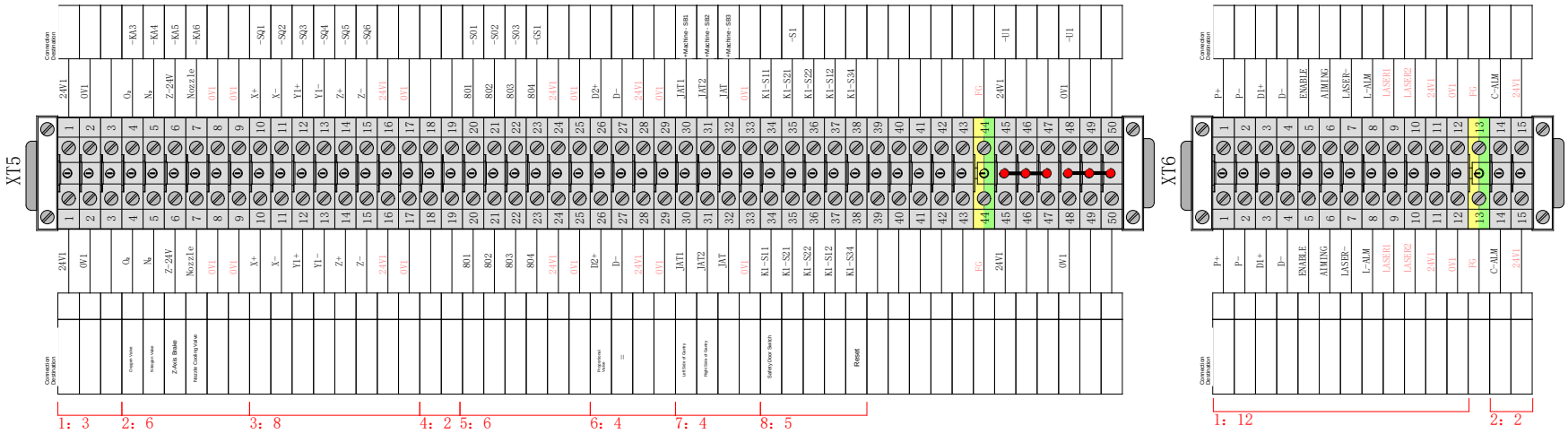

Note: The control cables for the laser source and chiller use two groups of pluggable terminals.

Designed by	WENYOUGANG	Design Date	2026/2/2		Terminal Diagram	Drawing No.	
Checked by		Check Date				Project No.	IEC_tp1001
Approved by		Approval Date				Sheets	10
						Page	12/16

= Electrical Drawings
+ Inside Control Cabinet

Main Power Switch
Main power switch

-QS1

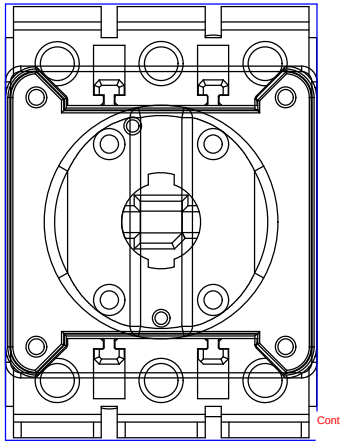

Power Indicator
Power indicator

-HL1

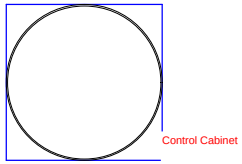

Reset Button
RESET

+Machine - SB4

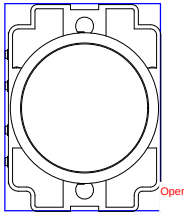

System Emergency Stop Button
Emergency stop

+Machine - SB1

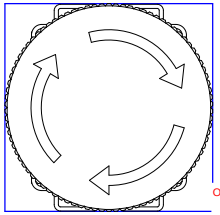

Laser / Spare
Laser / Ersatz

+Machine - SB0

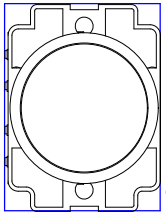

System Emergency Stop Button
Emergency stop

+Machine - SB2

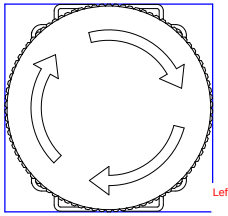

System Emergency Stop Button
Emergency stop

+Machine - SB3

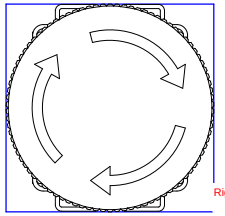

Designed by	WENYOUGANG	Design Date	2026/2/2		Pushbutton and Switch Locations	Drawing No.	
Checked by		Check Date				Project No.	IEC_tp1001
Approved by		Approval Date					

= Electrical Drawings
+ Inside Control Cabinet

Sheets 11
Page 13/16

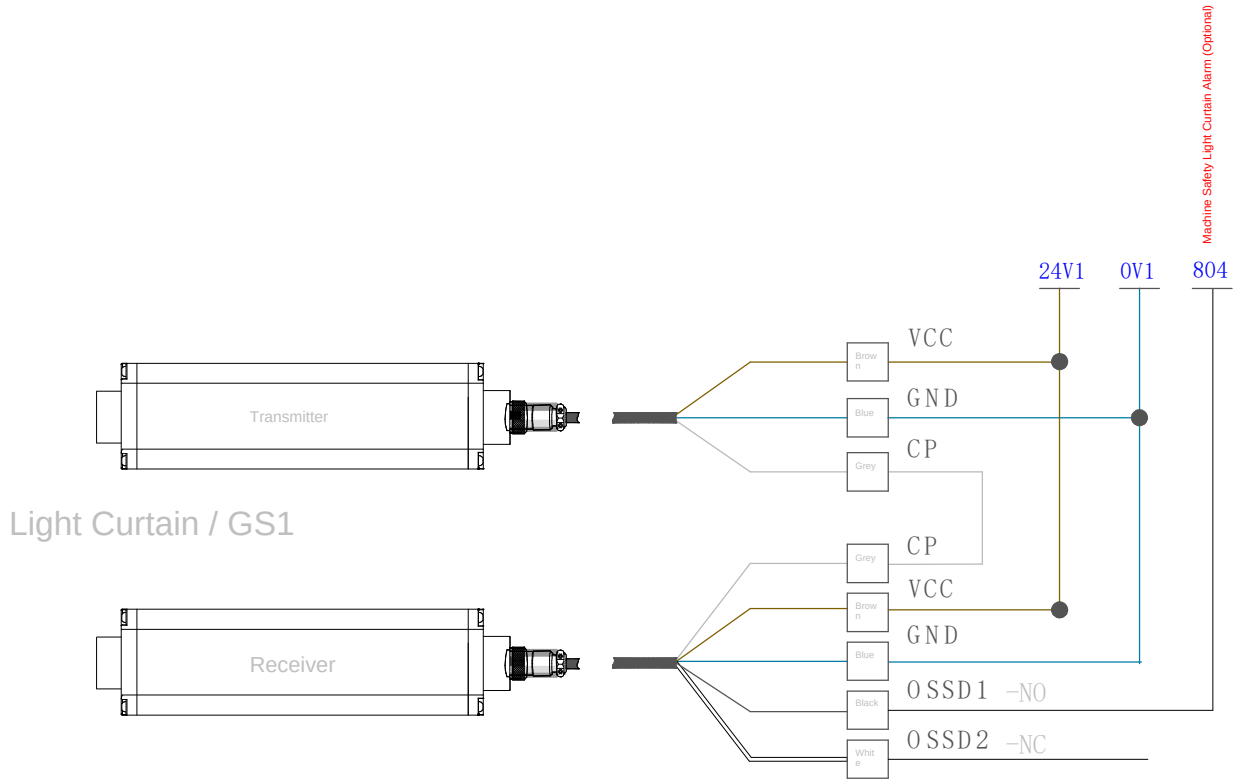

Note: The machine light-curtain protection is optional and should be selected according to actual requirements. When multiple light curtains are used, connect their normally open signals in parallel to the board input.

Machine tool grating protection is selected according to actual conditions
When there are multiple sets of gratings, Normally open signal parallel access board input point

Designed by	WENYOUGANG	Design Date	2026/2/2		Light Curtain Protection Wiring (Optional)	Drawing No.	
Checked by		Check Date				Project No.	IEC_tp1001
Approved by		Approval Date				Sheets	12
						Page	14/16

= Electrical Drawings
+ Inside Control Cabinet

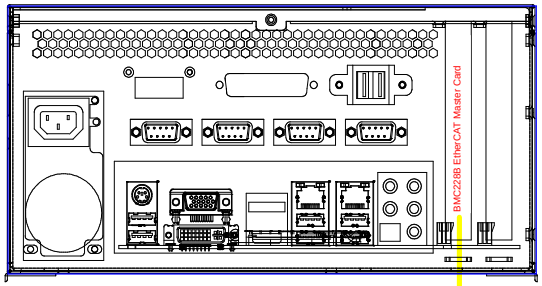

EtherCAT Bus

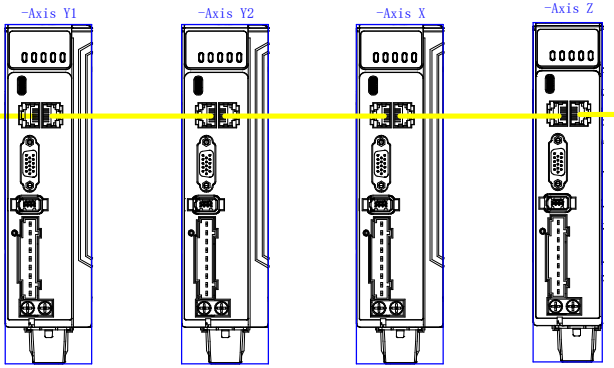

PWE-20 High-Flex Drag-Chain Hybrid Cable

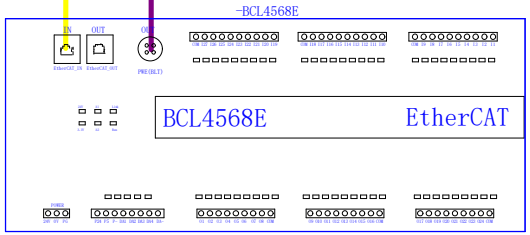

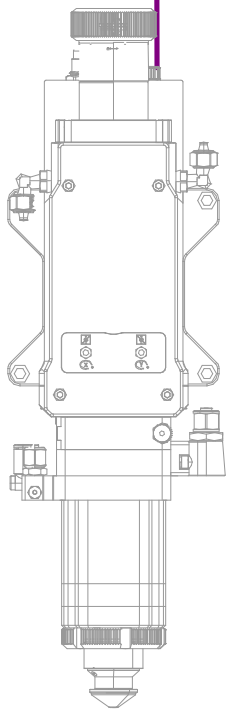

Designed by	WENYOUGANG	Design Date	2026/2/2		System Connection Block Diagram	Drawing No.	
Checked by		Check Date				Project No.	IEC_tp1001
Approved by		Approval Date				Sheets	13
						Page	15/16

= Electrical Drawings
+ Inside Control Cabinet

Front Electrical Cabinet

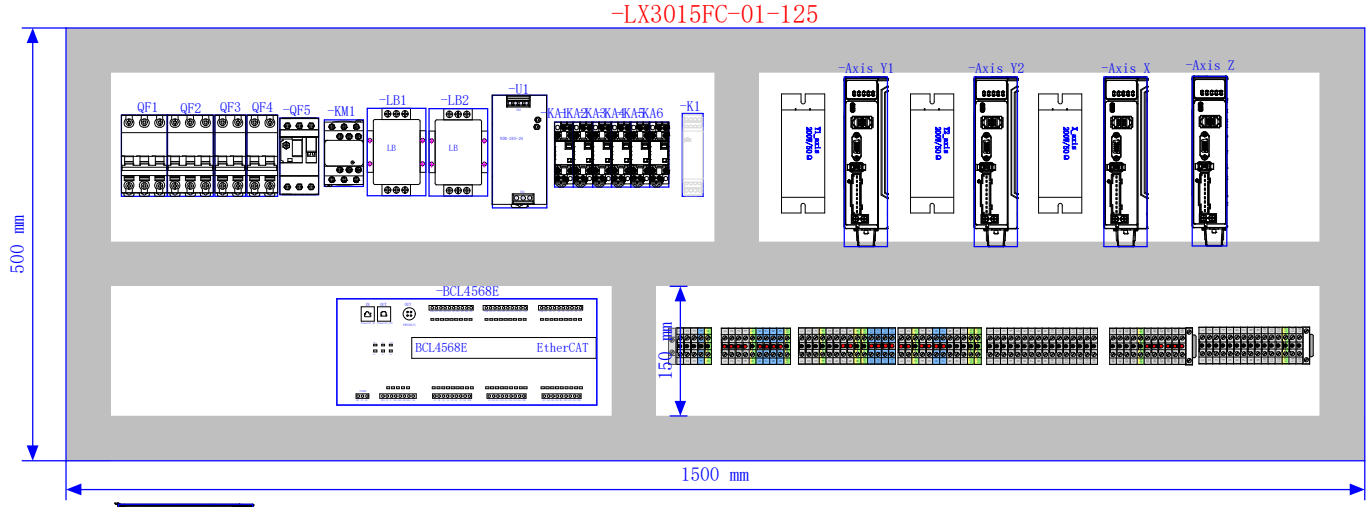

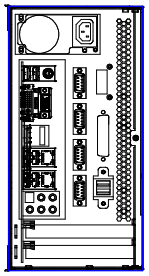

Rear Electrical Cabinet

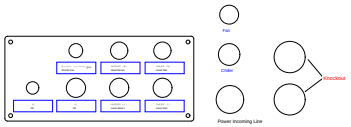

Actual layout depends on on-site assembly; this drawing is for reference only.

Designed by	WENYOUGANG	Design Date	2026/2/2		Layout Diagram - 3015FA	Drawing No.	
Checked by		Check Date				Project No.	IEC_tp1001
Approved by		Approval Date				Sheets	14
						Page	16/16

= Electrical Drawings
+ Inside Control Cabinet