Support@automationtechnologiesinc.com

Hybrid Stepper Motor

KL23H276-28-4B

Automation Technology Inc. Automationtechnologiesinc.com

UNIT=MM:

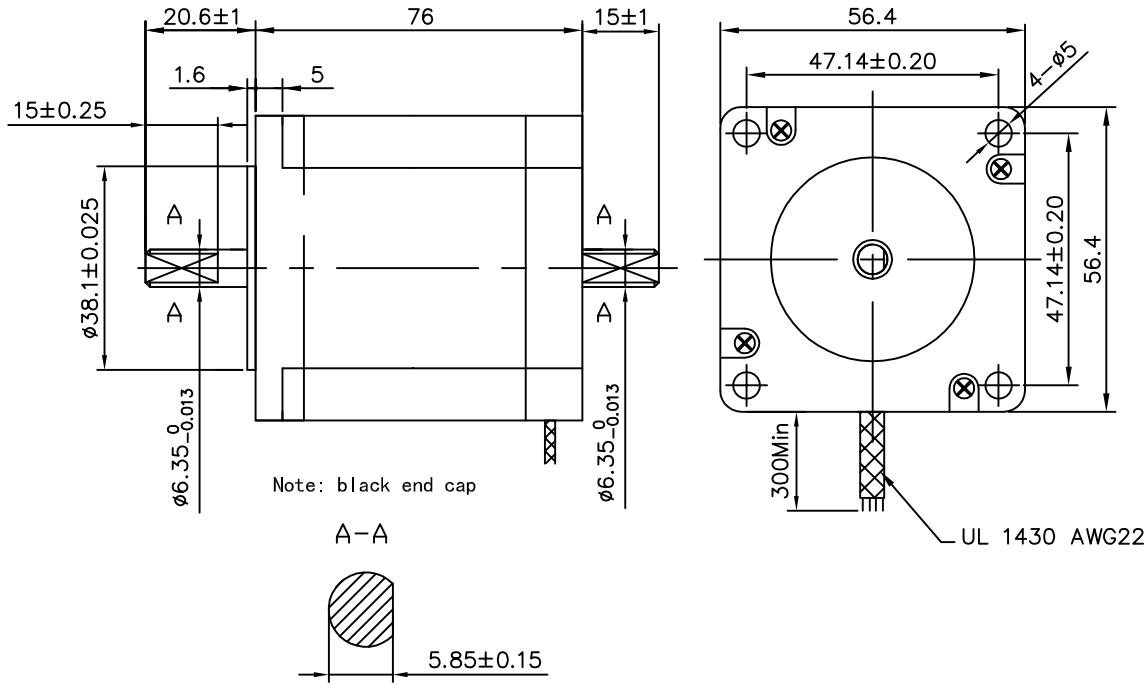

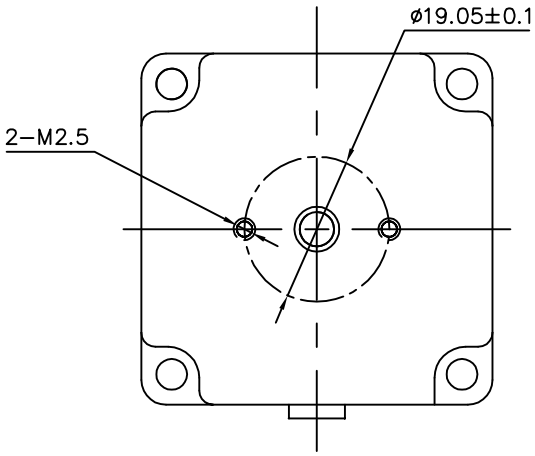

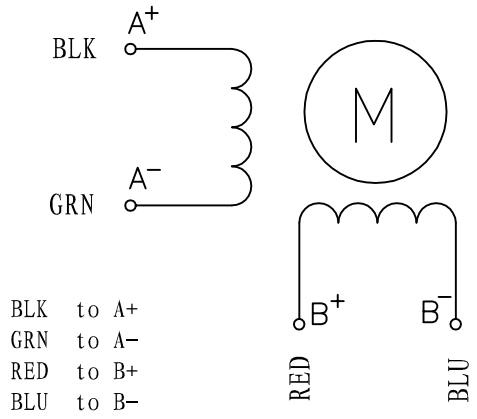

MODEL	PHASE	STEP PHASE	RATED VOLTAGE	CURRENT /PHASE	RESISTANCE /PHASE	INDUCTANCE /PHASE	HOLDING TORQUE	ROTOR INERTIA	WEIGHT
		DEG/STEP	V	A	ohms	mH	OZ-IN	gcm^2	Kg
	2	1.8	3.2	2.8	1.13	3.6	270	480	1