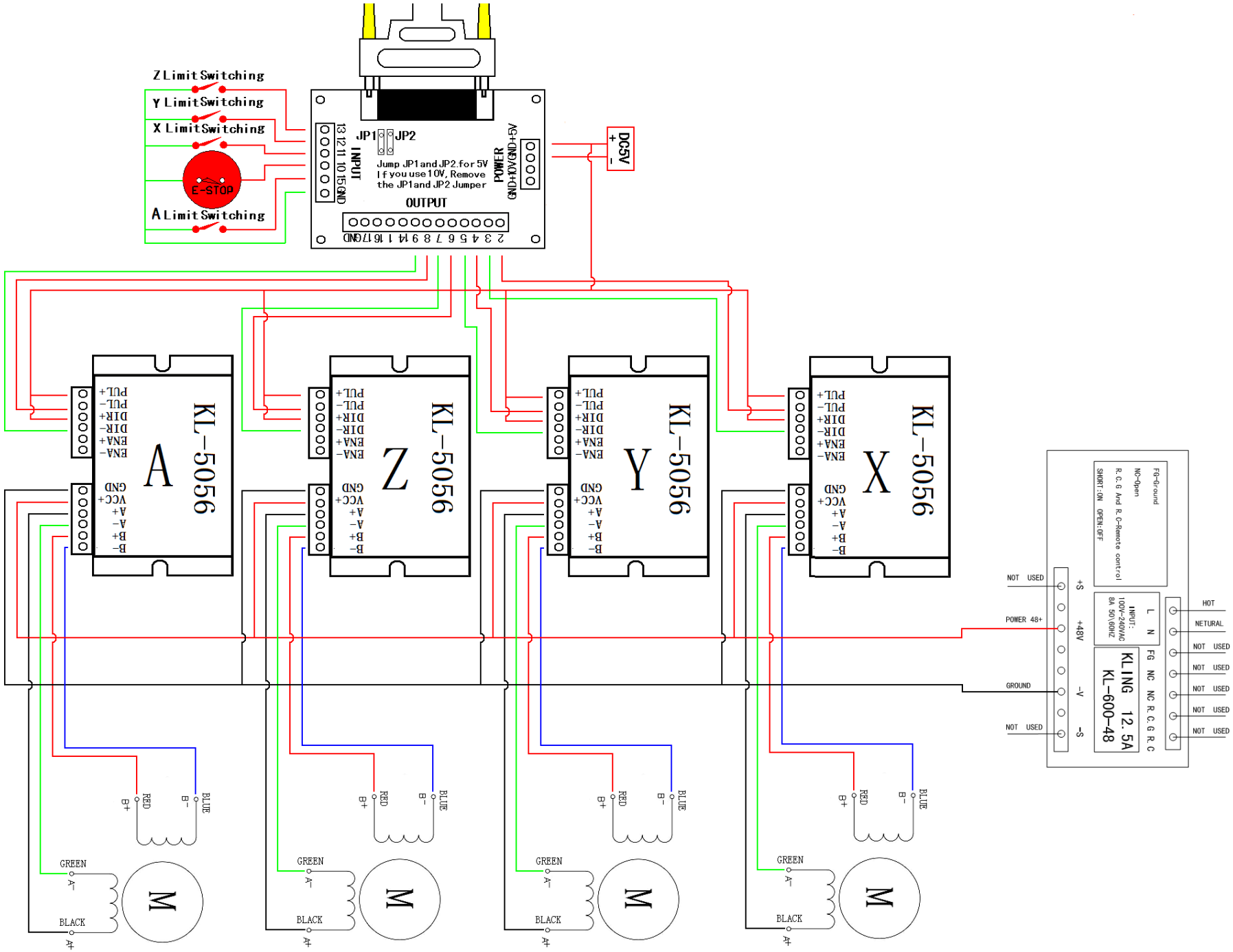
Z Limit Switching
Y Limit Switching
X Limit Switching
E-STOP
A Limit Switching
JP1
JP2
Jump JP1 and JP2 for 5V
If you use 10V, Remove
the JP1 and JP2 Jumper
INPUT
13 12 11 10 15 GND
OUTPUT
2 3 4 5 6 7 8 9 14 1 16 17 GND
POWER
GND+10V GND+5V
DC5V
+
-
KL-5056
A
Z
Y
X
ENA-
ENA+
DIR-
DIR+
PUL-
PUL+
GND
VCC+
A+
A-
B+
B-
RED
BLUE
GREEN
BLACK
M
FG-Ground
NC-Open
R. C. G And R. C-Remote control
SHORT:ON OPEN:OFF
INPUT:
100V~240VAC
8A 50\60HZ
L N
FG NC NC R. C. G R. C
KLING 12.5A
KL-600-48
+S
+48V
-V
-S
NOT USED
POWER 48+
GROUND
HOT
NETURAL