Support@automationtechnologiesinc.com

Hybrid Stepper Motor

KL23H251-24-8B

Automation Technology Inc.

Automationtechnologiesinc.com

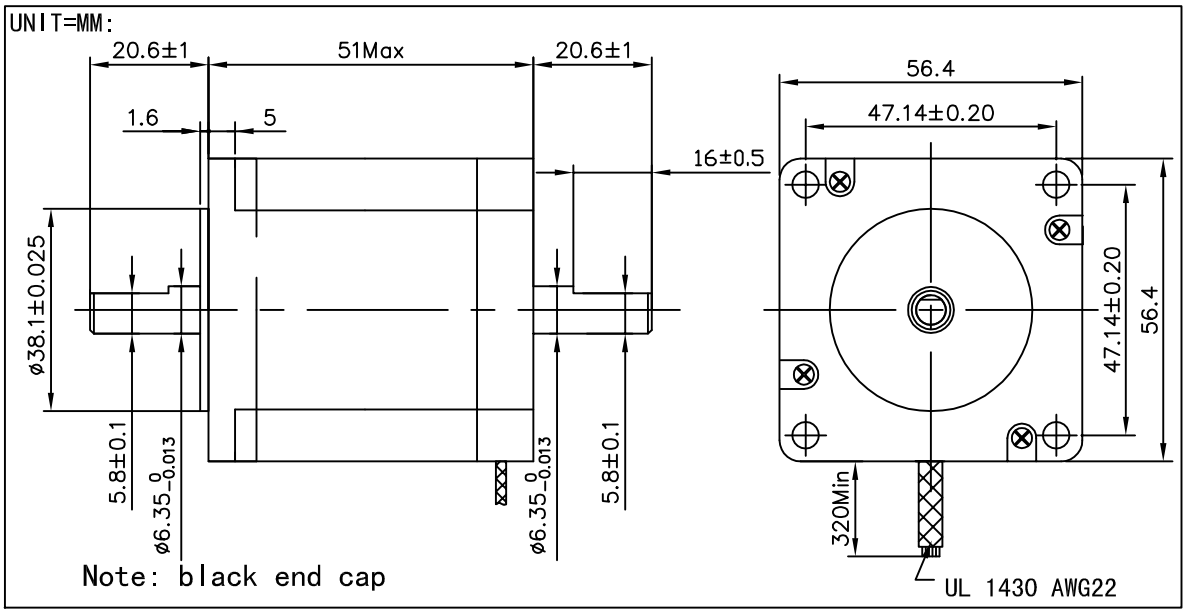

	STEP PHASE	RATED VOLTAGE	CURRENT /PHASE	RESISTANCE /PHASE	INDUCTANCE /PHASE	HOLDING TORQUE	ROTOR INERTIA	WEIGHT
	DEG/STEP	V	A	ohms	mH	OZ-IN	gcm^2	Kg
Unipolar	1.8	4.32	2.4	1.8	3.3	113	275	0.65
Bipolar (Series)		6.12	1.7	3.6	13.2	156		
Bipolar (Parallel)		3.06	3.4	0.9	3.3	156		

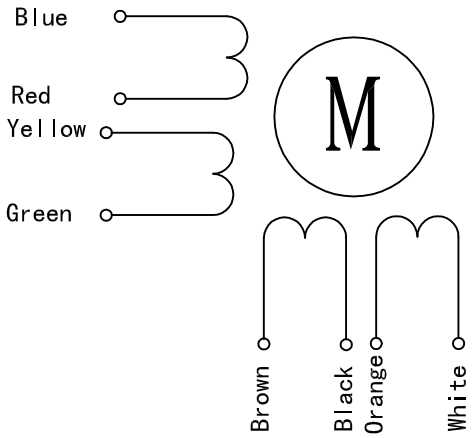

UL1430-AWG20#LENGTH320mm

Bipolar (Parallel) Connection

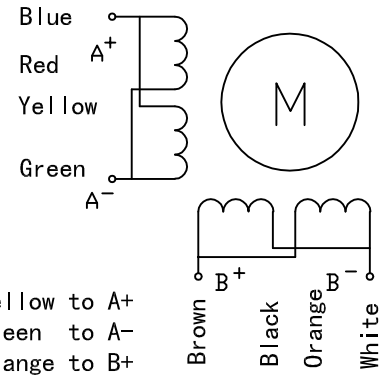

Blue & Yellow to A+
Red & Green to A−
Brown & Orange to B+
Black & White to B−

Bipolar (Series) Connection

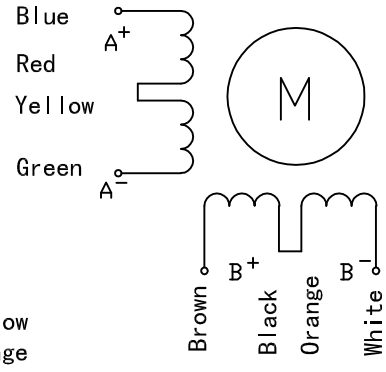

Blue to A+
Green to A−
Brown to B+
White to B−
Red & Yellow
Black & Orange

Unipolar Connection

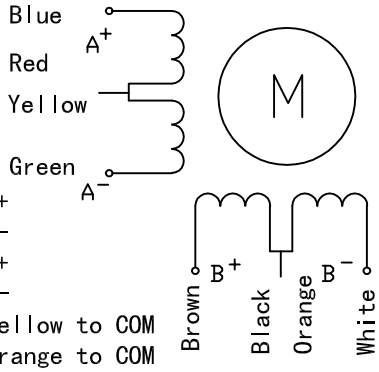

Blue to A+
Green to A−
Brown to B+
White to B−
Red & Yellow to COM
Black & Orange to COM