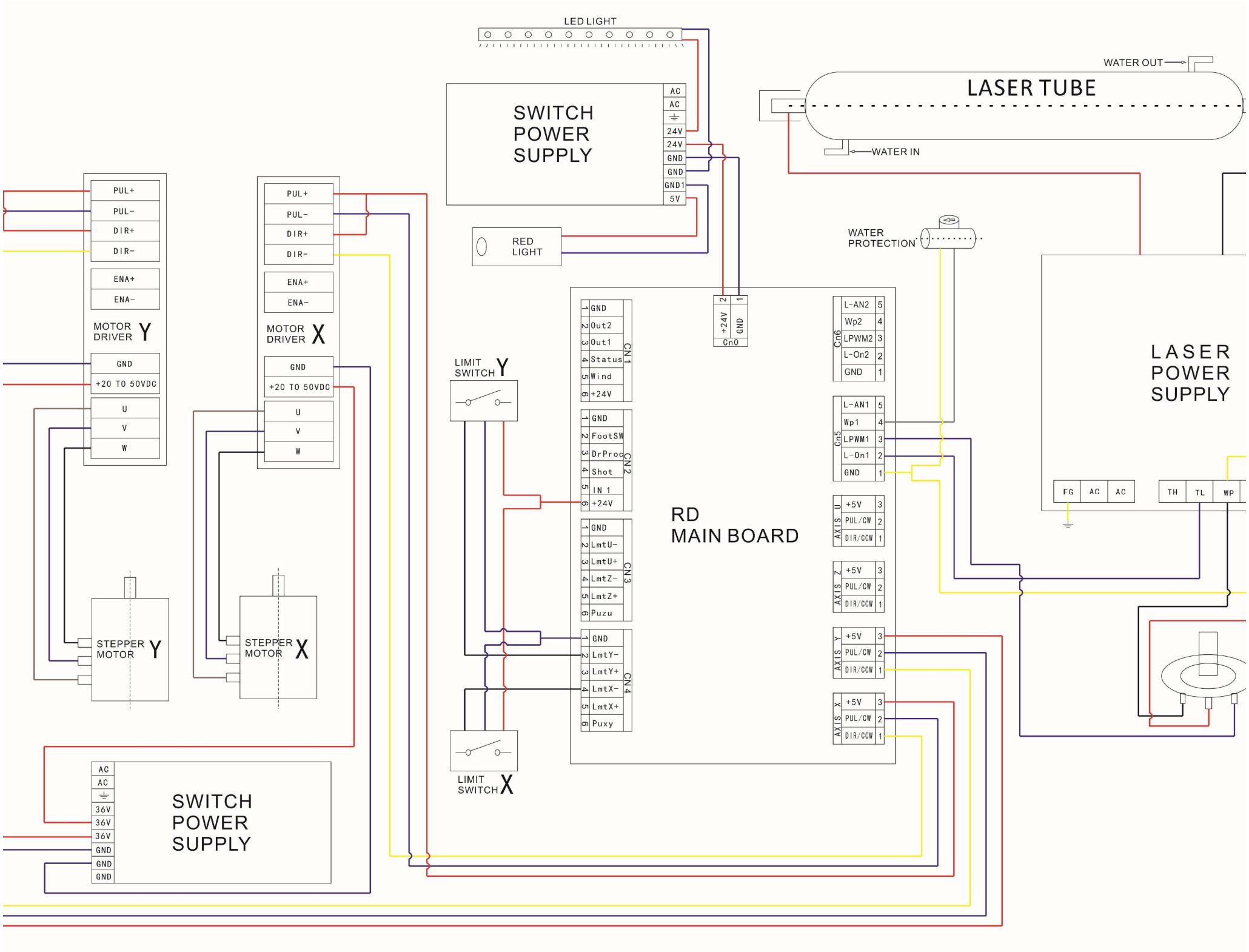
LED LIGHT
SWITCH POWER SUPPLY
AC
AC
24V
24V
GND
GND
GND1
5V
RED LIGHT
WATER OUT
LASER TUBE
WATER IN
WATER PROTECTION
LASER POWER SUPPLY
FG
AC
AC
TH
TL
WP
PUL+
PUL-
DIR+
DIR-
ENA+
ENA-
MOTOR DRIVER Y
GND
+20 TO 50VDC
U
V
W
MOTOR DRIVER X
STEPPER MOTOR Y
STEPPER MOTOR X
LIMIT SWITCH Y
LIMIT SWITCH X
+24V
GND
Cn0
CN1
GND
Out2
Out1
Status
Wind
+24V
CN2
GND
FootSW
DrProc
Shot
IN 1
+24V
CN3
GND
LmtU-
LmtU+
LmtZ-
LmtZ+
Puzu
CN4
GND
LmtY-
LmtY+
LmtX-
LmtX+
Puxy
RD MAIN BOARD
Cn6
L-AN2
Wp2
LPWM2
L-On2
GND
Cn5
L-AN1
Wp1
LPWM1
L-On1
GND
AXIS U
AXIS Z
AXIS Y
AXIS X
+5V
PUL/CW
DIR/CCW
36V
36V
36V
GND
GND
GND
SWITCH POWER SUPPLY