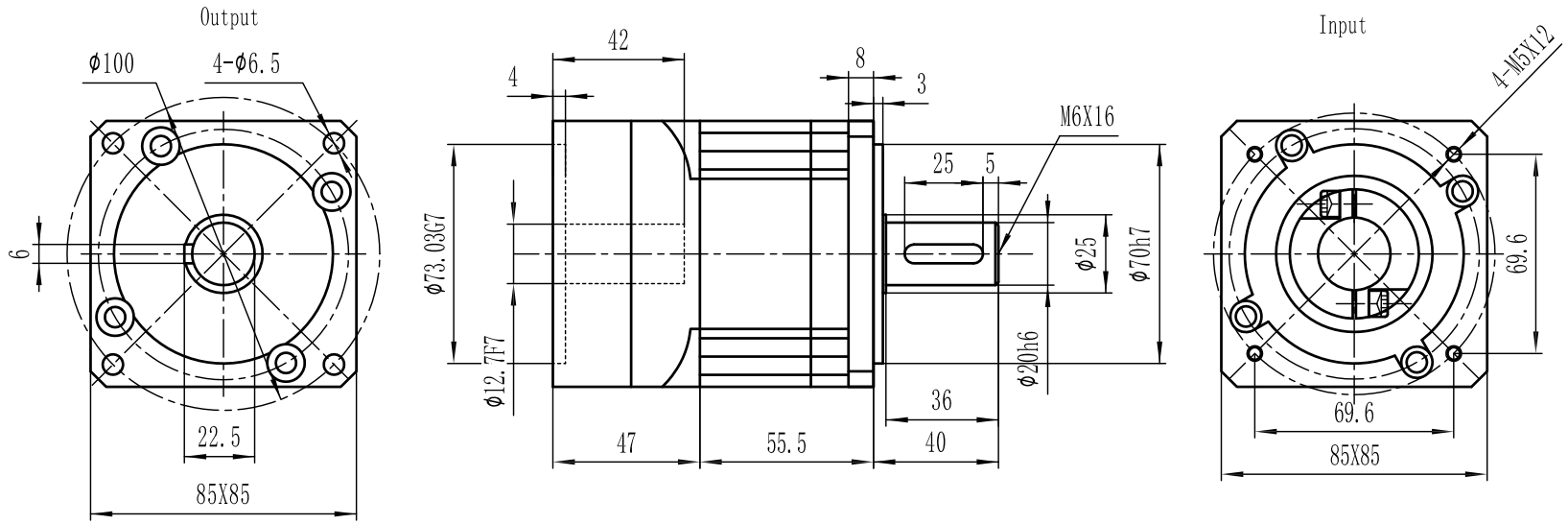

Specifications

Ratio	10:1
Nominal Output Torque	50NM
Max Output Torque	100NM
Avergae Input Speed	3500r/min
Max Input Speed	6000r/min
Frmax. for 10000h	450N
Famax. for 10000h	430N
Backlash	<7arcmin
Average Lifetime	<20000h
Noise	<60dB

KL-34GH101PS